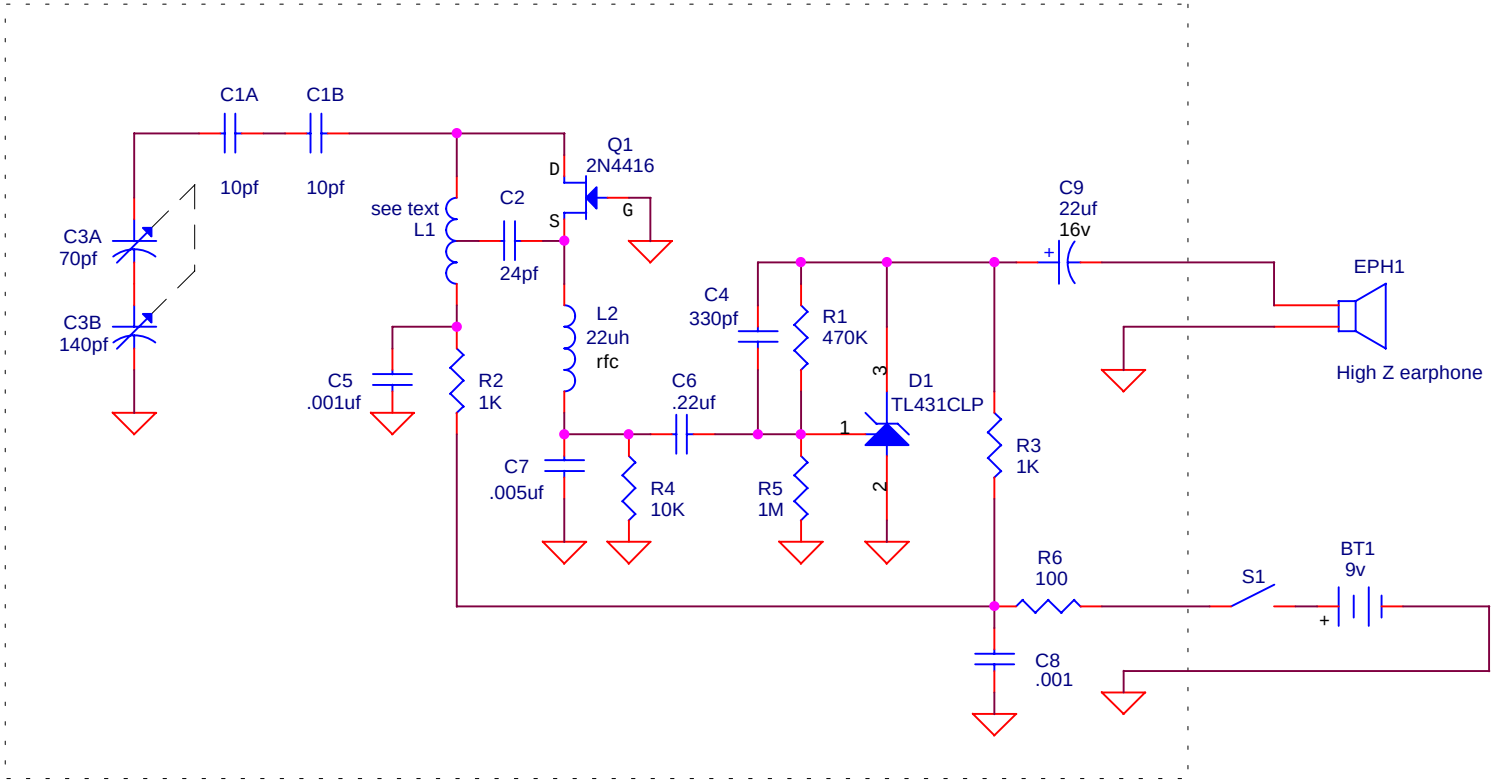

L1:
Wind 6 turns of solid wire on a pen or pencil that is just under 1/2 inch in diameter. Remove the wire from the pencil and spread the winding to make a length of 3/4 inch. Solder C2 somewhere near the middle of the coil.

TL431
Bottom
View

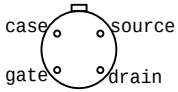

2N4416 Bottom View
The case lead should be grounded.

Title	Simple FM Radio by Andrew Mitz, LTJ Designs	
Size A	Document Number SFM1 Copyright 1999-2001 LTJ Designs	Rev 1.5
Date: Thursday, February 15, 2001	Sheet 1 of 1	